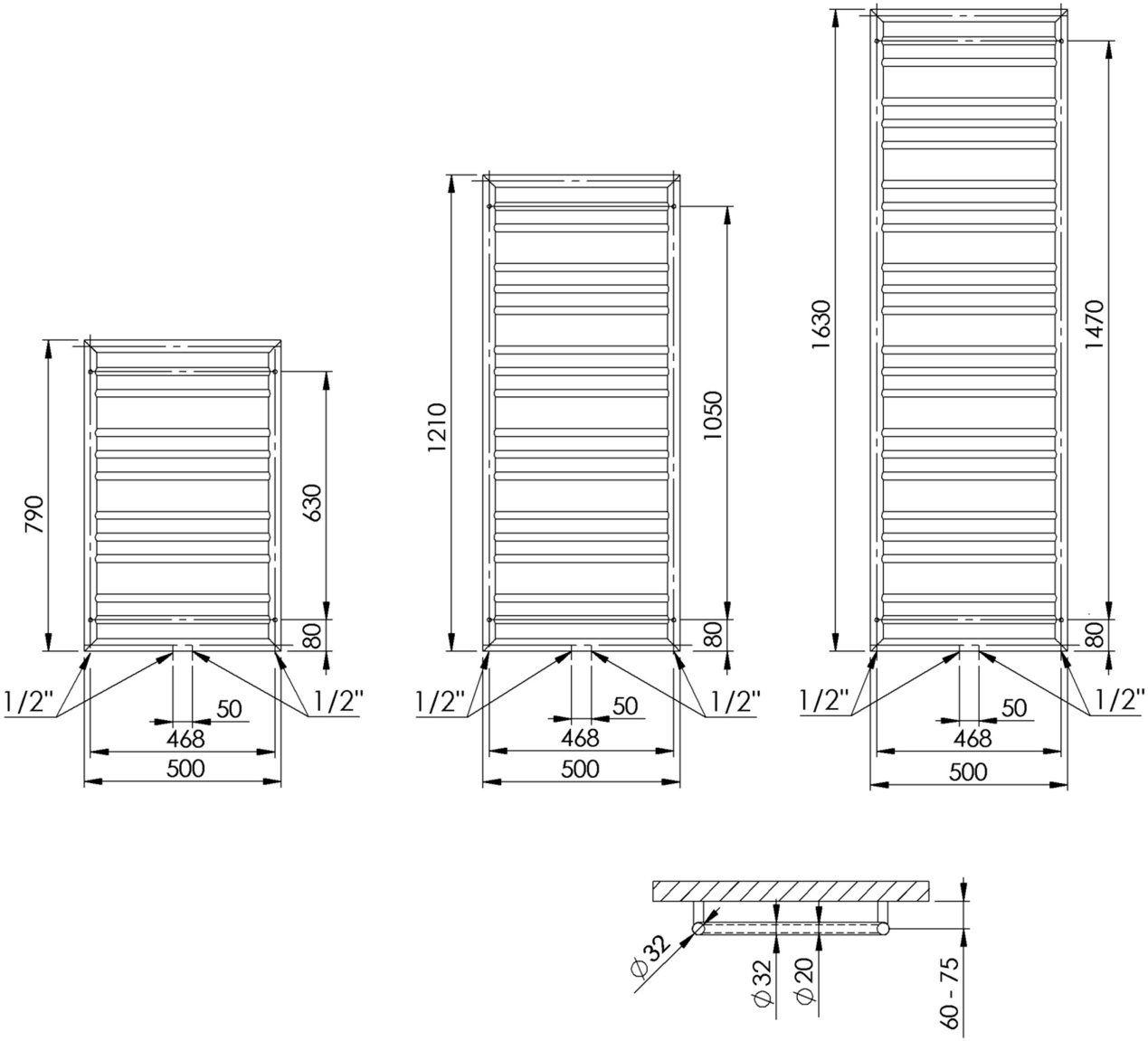
790
630
80
1/2"
50
468
500
1/2"
1210
1050
80
1/2"
50
468
500
1/2"
1630
1470
80
1/2"
50
468
500
1/2"
Ø32
Ø32
Ø20
60 - 75

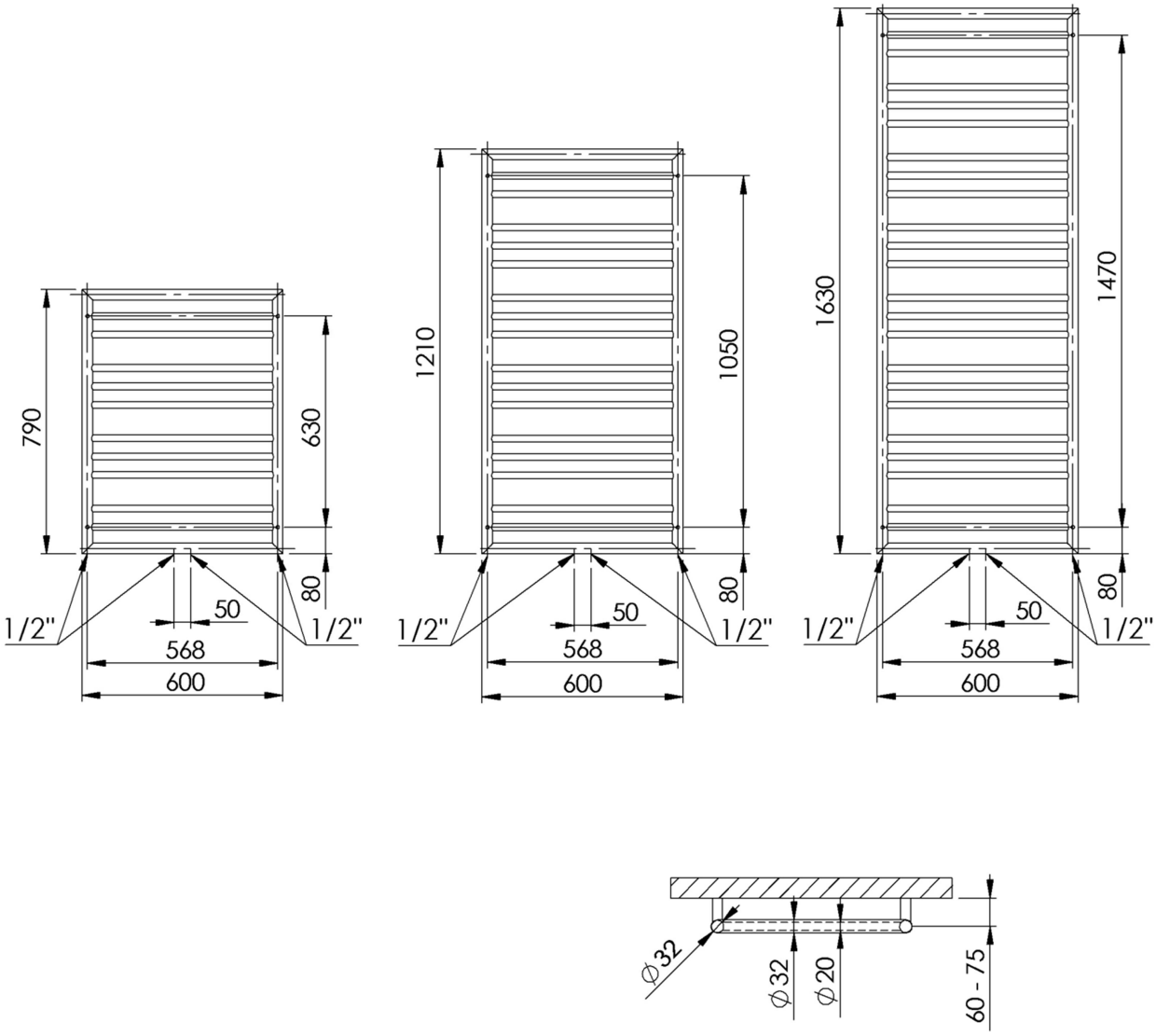
790
630
80
1/2"
50
1/2"
568
600
1210
1050
80
1/2"
50
1/2"
568
600
1630
1470
80
1/2"
50
1/2"
568
600
Ø32
Ø32
Ø20
60 - 75