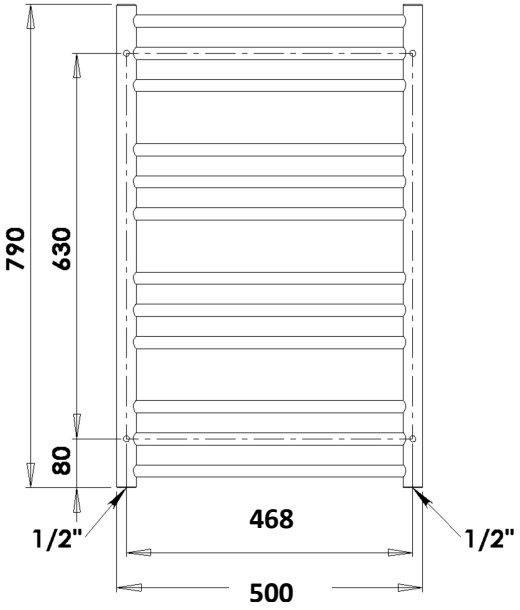
790
630
80
1/2"
468
1/2"
500

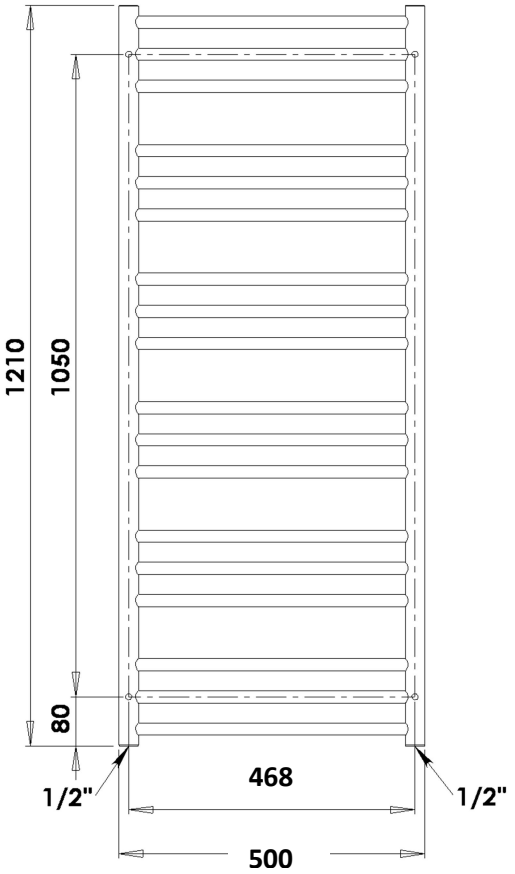
1210
1050
80
1/2"
468
1/2"
500

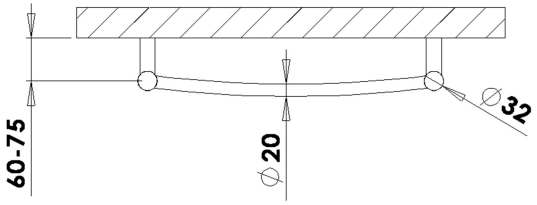
60-75
⌀20
⌀32

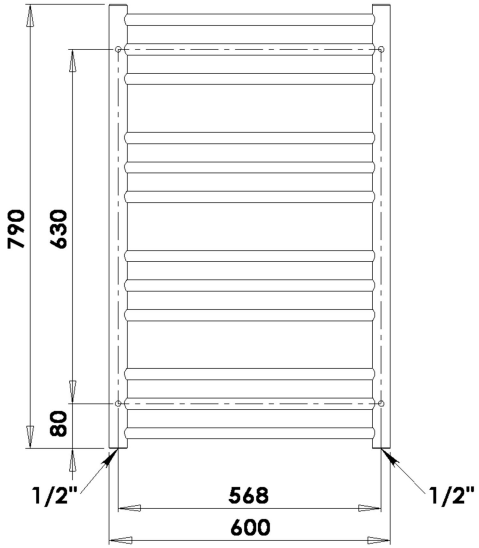
790
630
80
1/2"
568
600
1/2"

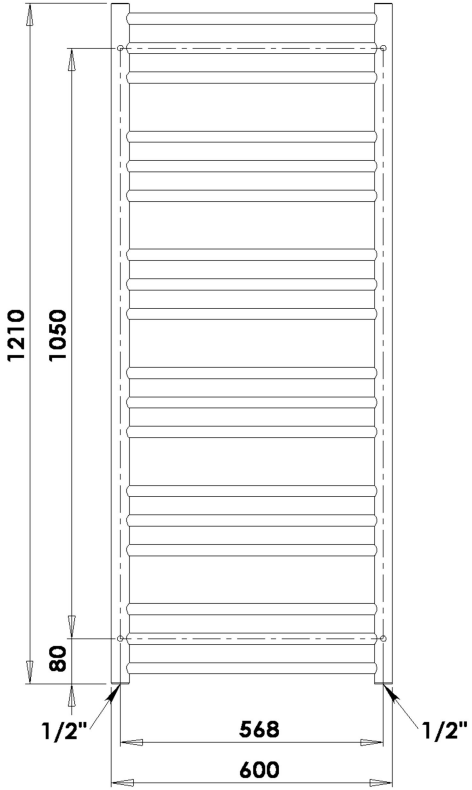
1210
1050
80
1/2"
568
600
1/2"

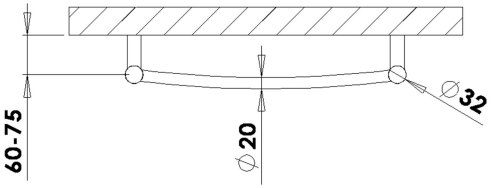
60-75
∅20
∅32