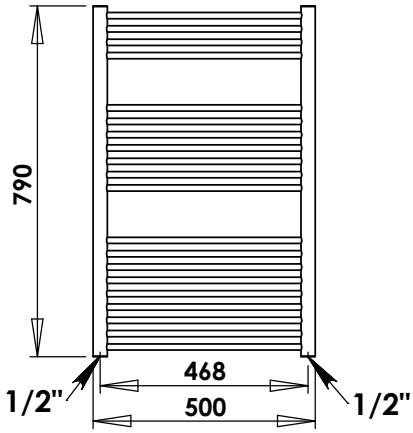
790
468
500
1/2"
1/2"

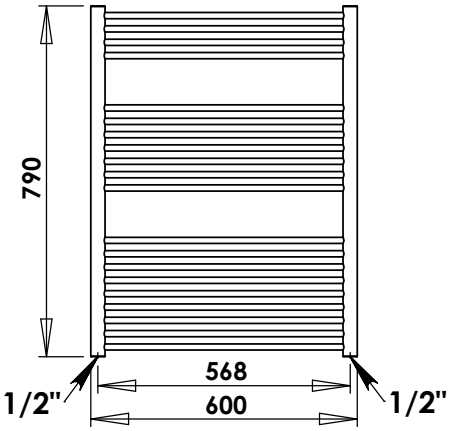
790
568
600
1/2"
1/2"

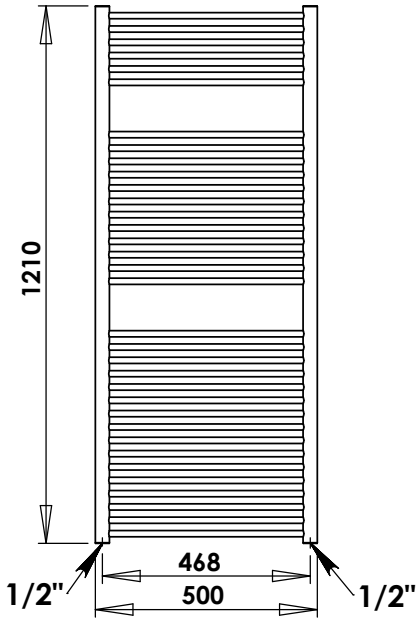
1210
468
500
1/2"
1/2"

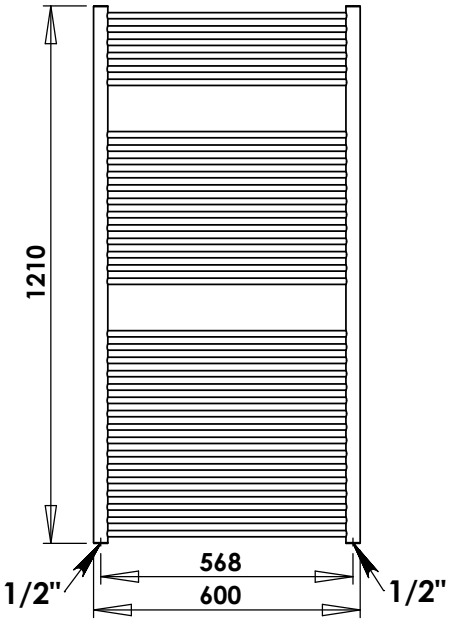
1210
568
600
1/2"
1/2"

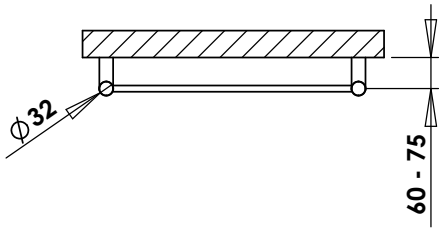
Ø32
60 - 75

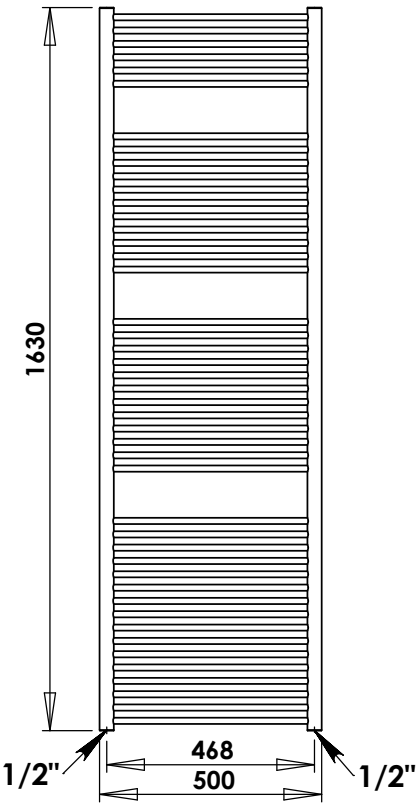
1630
468
500
1/2"
1/2"

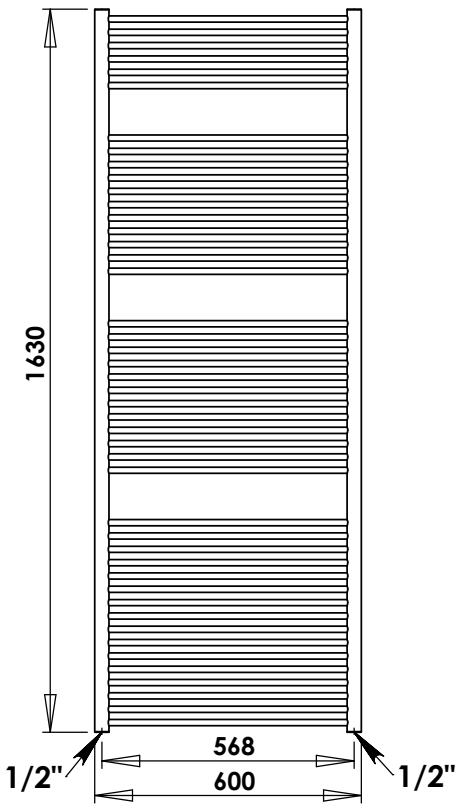
1630
568
600
1/2"
1/2"