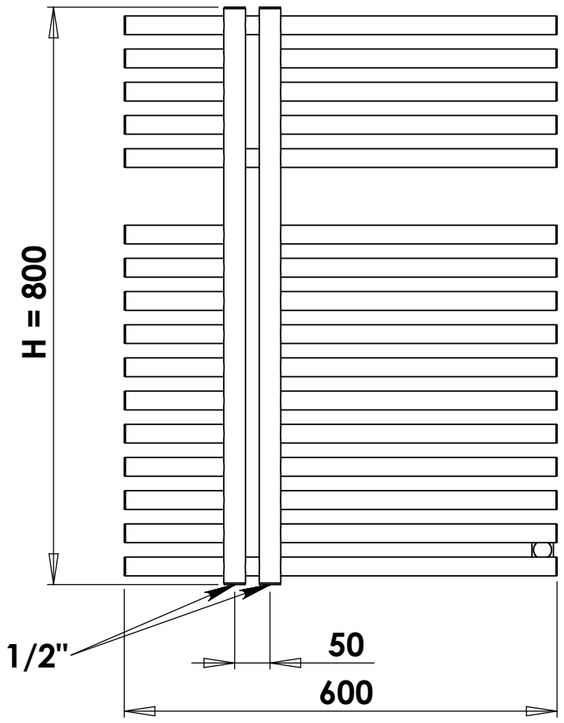
H = 800
1/2"
50
600

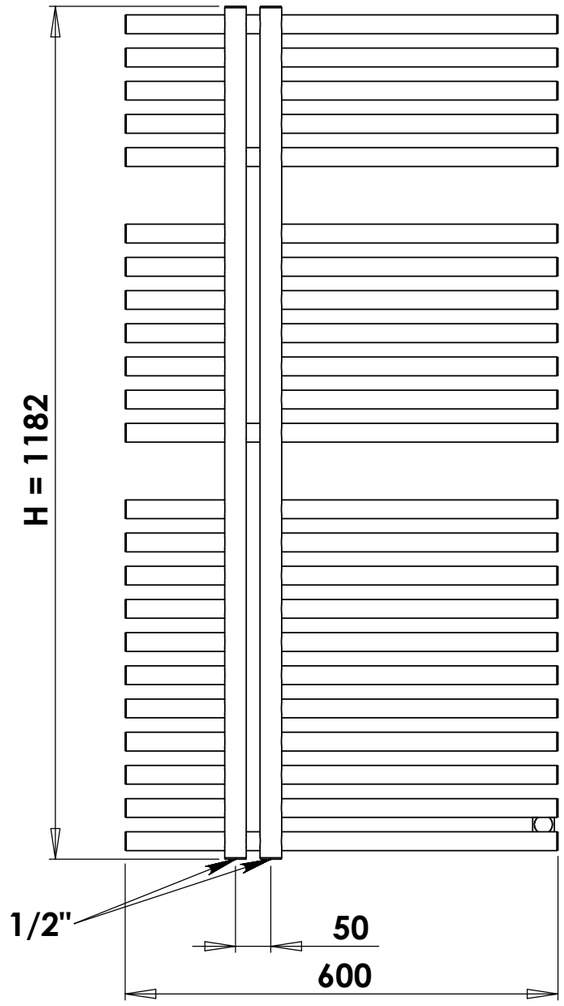
H = 1182
1/2"
50
600

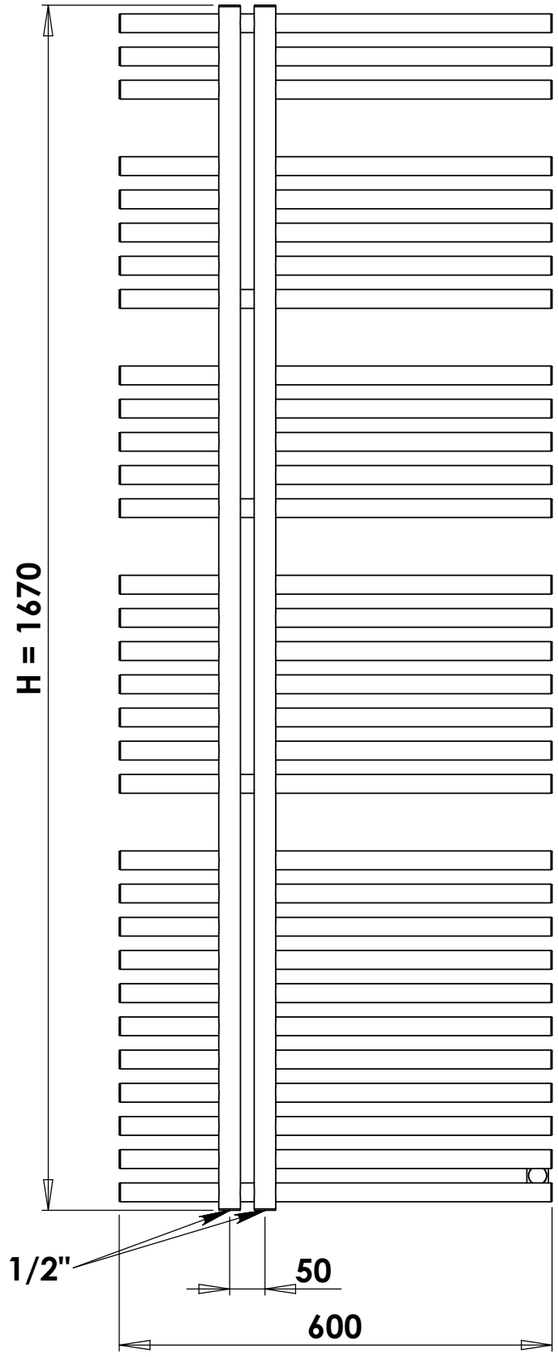
H = 1670
1/2"
50
600

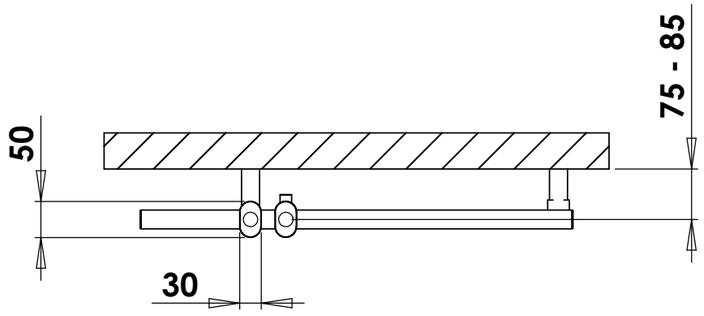
75 - 85
50
30