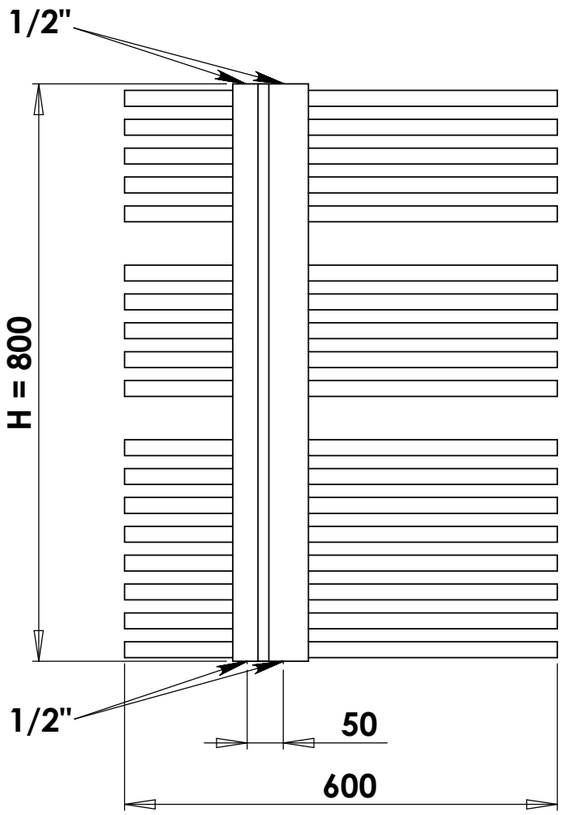
1/2"
H = 800
1/2"
50
600

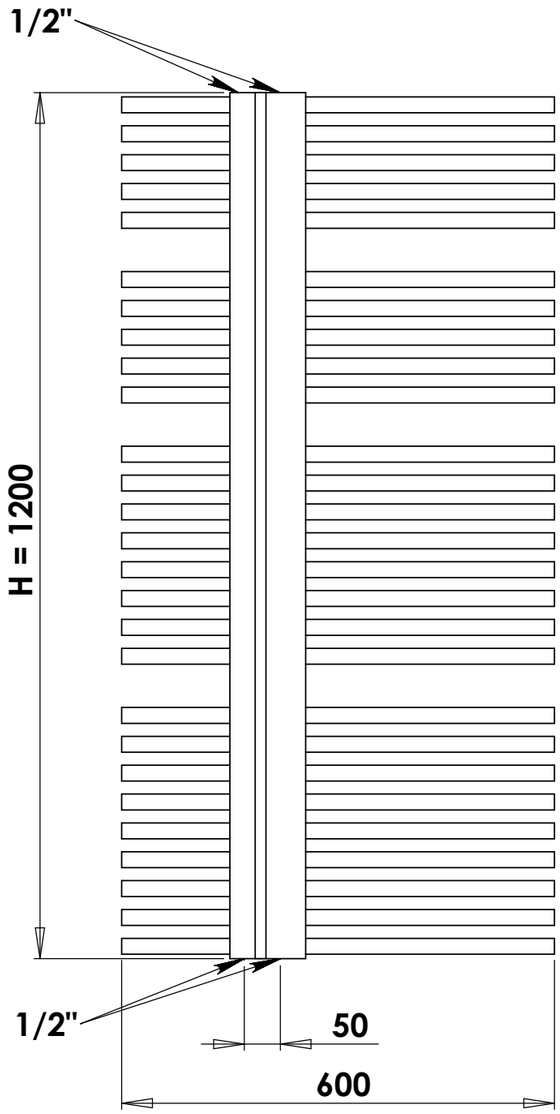
1/2"
H = 1200
1/2"
50
600

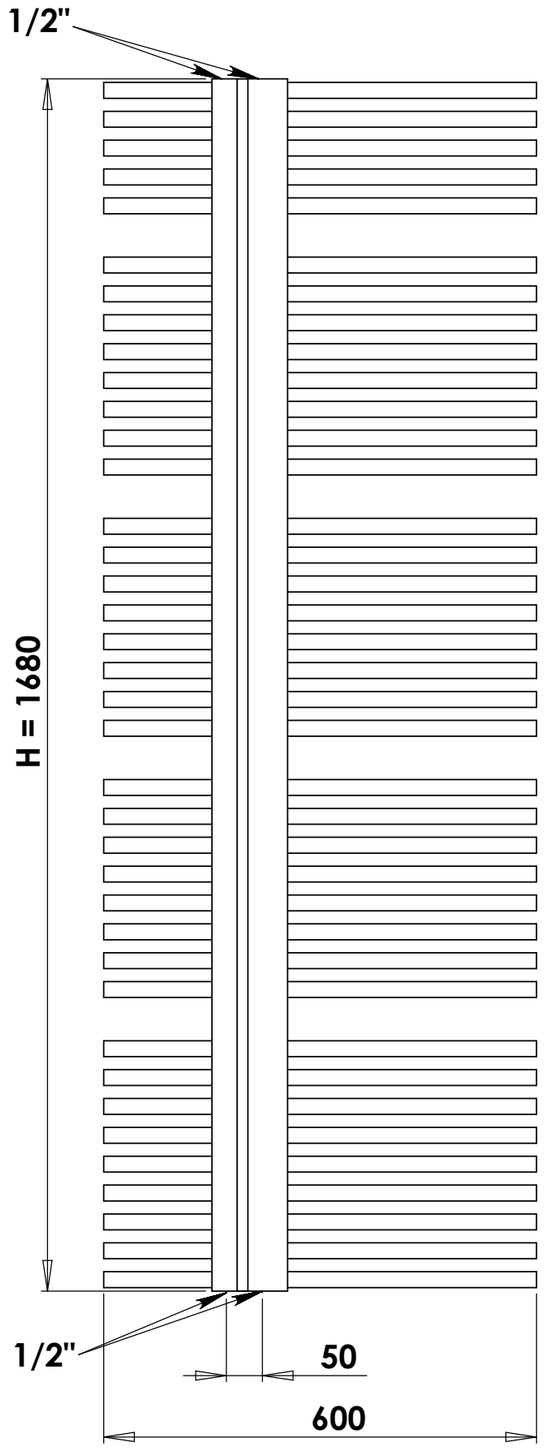
1/2"
H = 1680
1/2"
50
600

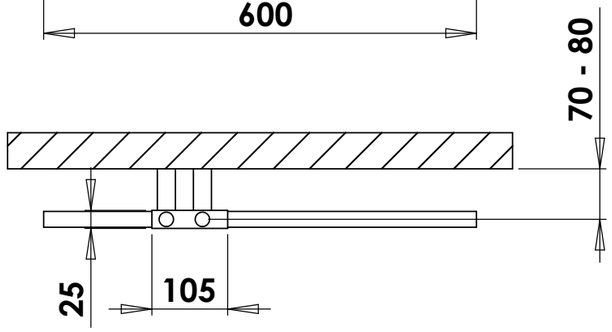
70 - 80
25
105